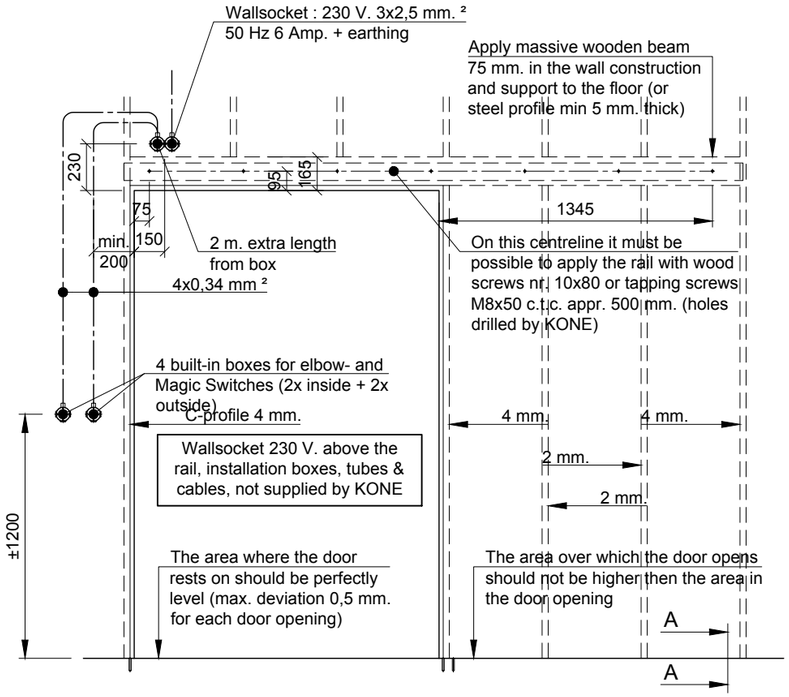

Frontview wallopening (1:30)

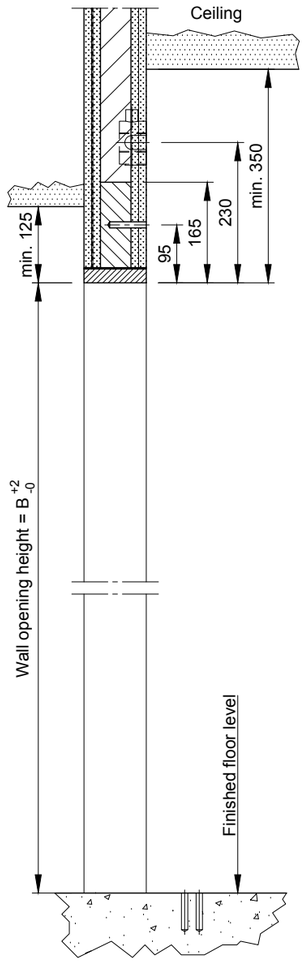

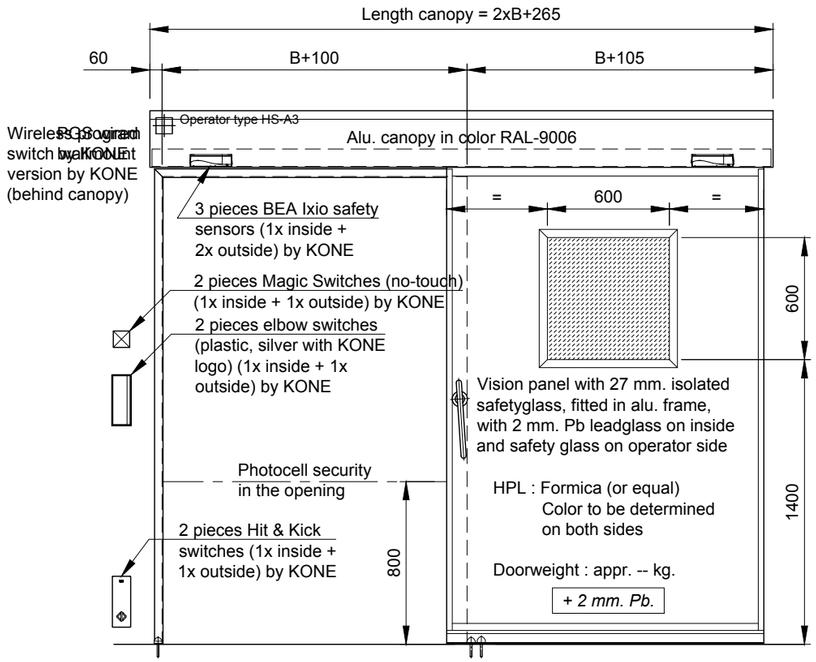

Frontview with door (1:30)

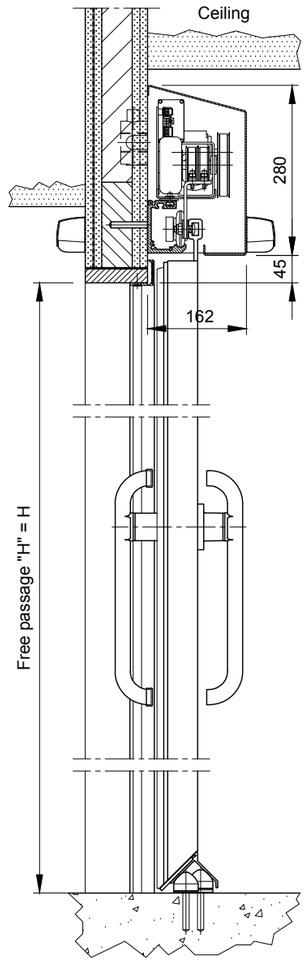

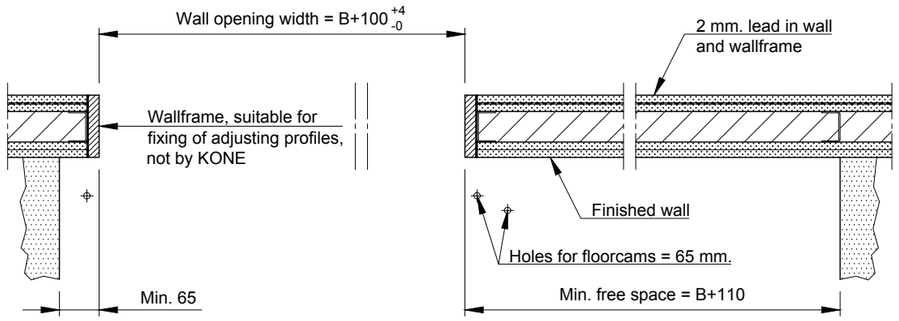

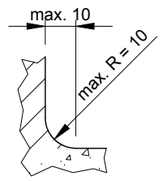

Section A-A (1:2)

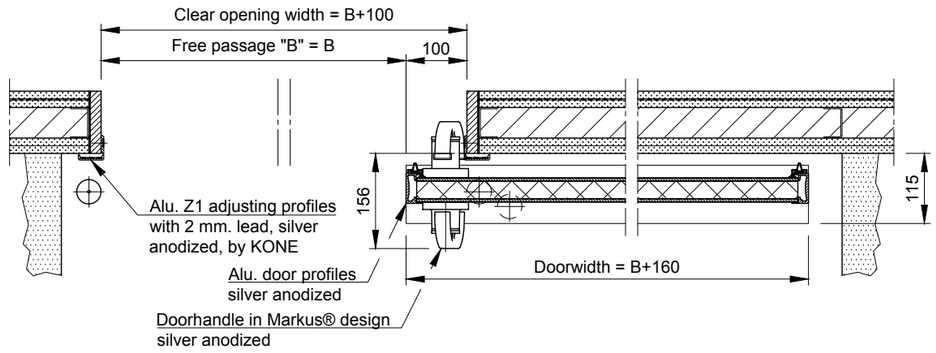

Remarks :

The Structural Opening of wallframe straight and angled, suitable for fixing of alu. adjusting profiles.

The wall and floor finishing must be ready before installation of the sliding door.

Massive horizontal wooden beam min. 75 mm. in wall construction (or steel profile min. 5 mm. thickness).

The wall construction must be strong enough to carry the doorweight. Lowering of the wall construction must not be possible.

Position 1 :

B x H = free passage	B x H mm.
Direction =	Righthand
Quantity =	1x

Title: M5-L2, hermetical sealed door, automatic with 2 mm. leadinlay and Z1 frame		Drawing number:
Order number: --	Page no.: 01	Projectie ISO-128	M5-L2 RO Z1 A3
Date: 23-03-2018	Scale: 1:30 / 1:10	A	Revision number:
Drawn by: A.v.D.	Paper size: A3		A:
KONE	Accustraat 21 Postbus 94 3900 AB Veenendaal Tel.: 0318 - 532333 Fax: 0318 - 532339		B:
			C:
			Copyright by KONE